Surge protection for transmitting and receiving systems

SPD with SMA connector

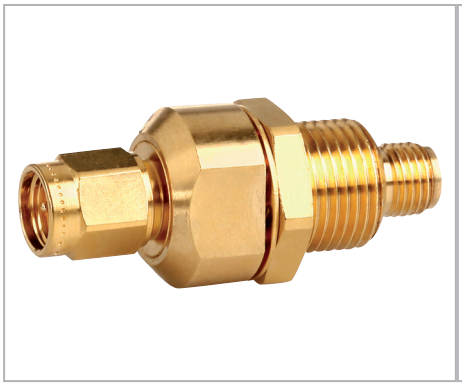

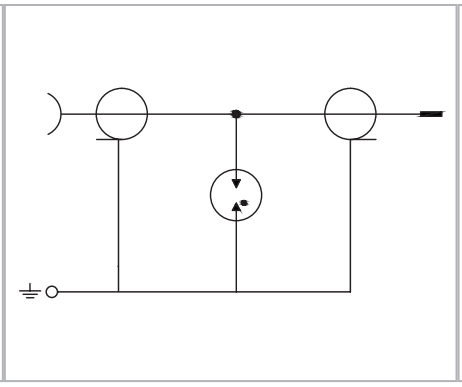

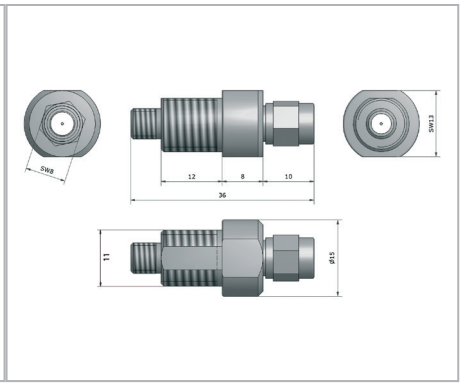

Surge protection device for coaxial signal lines with SMA connectors.The very high frequency range of up to 6 GHz enables the use in wireless LAN and similar applications. The discharge current arrester can be mounted in and earthed in a mounting plate.

- **Surge protection device for extremly high freqeuncies up to 6 GHz**
- **Applicable at the boundaries LPZ 0B - 1 and higher**
- **Connector according to IEC 61169-8**
- **Earthing via metal housing**
- **Test standard: IEC 61643-21 / EN 61643-21**
- **Mounting with angle bracket or in mounting plate possible**

Technical Data		AntPro 5,8GHz-SMA
IEC category		C2 / C1 / C3
Surge impedance	Z	50 Ω
Frequency range	fO	0 - 6000 MHz
Return loss	RL	≥ 20 dB
Breakdown voltage (100V/s)		150 - 250 V
C2 nominal discharge current (8/20 µs)	In	5 kA
Max. impulse discharge current (8/20 µs)	Imax	10 kA
Max. transmission capacity		25 W
Operating temperature range	TU	-40 - +85 °C
Plug connector		SMA (m/f)

Order Data	
Product	AntPro 5,8GHz-SMA
Article-No.	04 58 00

10.02.2020

We reserve the right to make alterations in style and form in line with technical development. The illustrations are non-binding. We do not assume liability for mistakes or printing errors.
Copyright© LEUTRON GmbH 2020